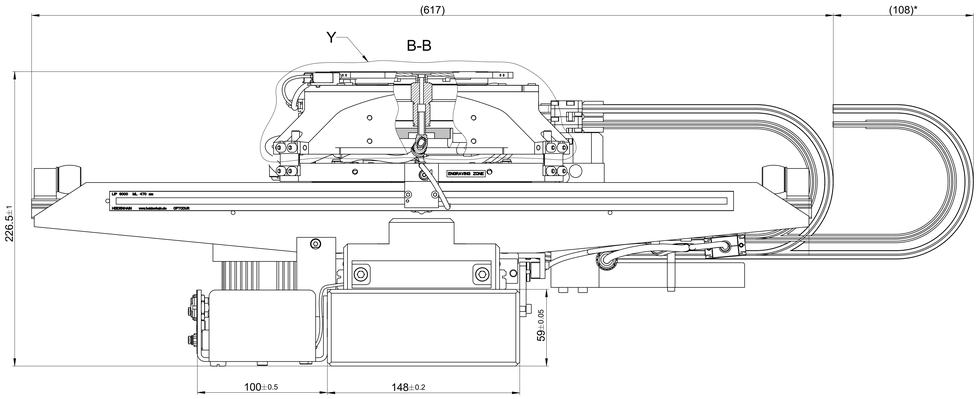

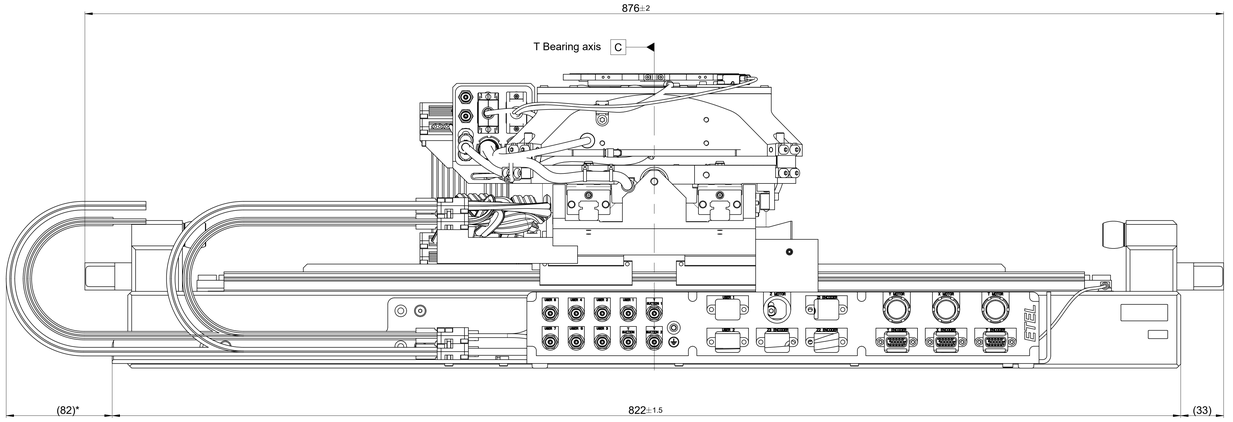

* Dimensions with cables at the end of the strokes

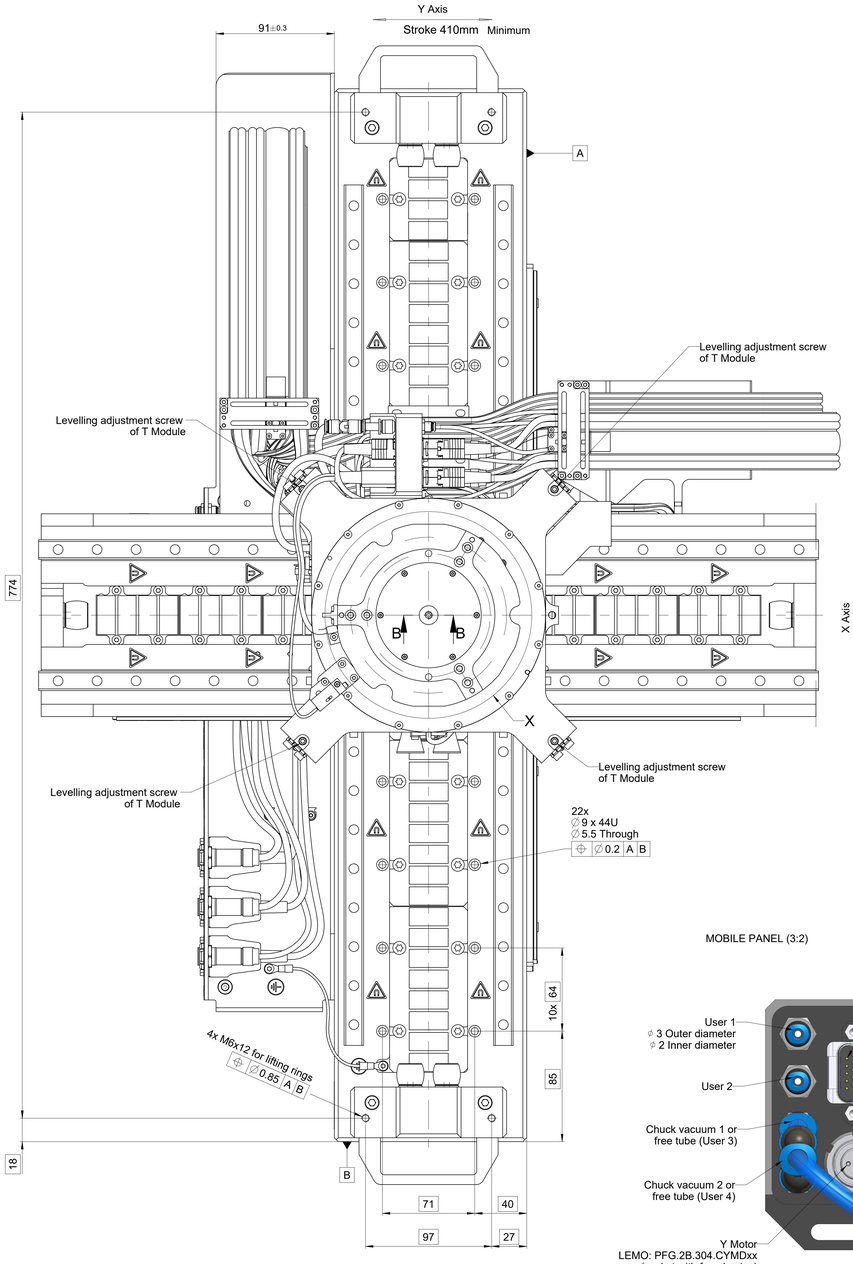

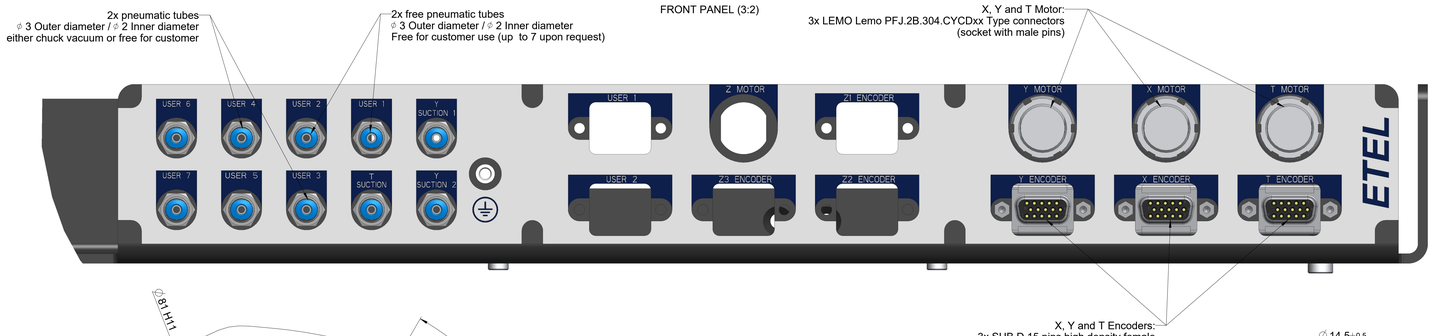

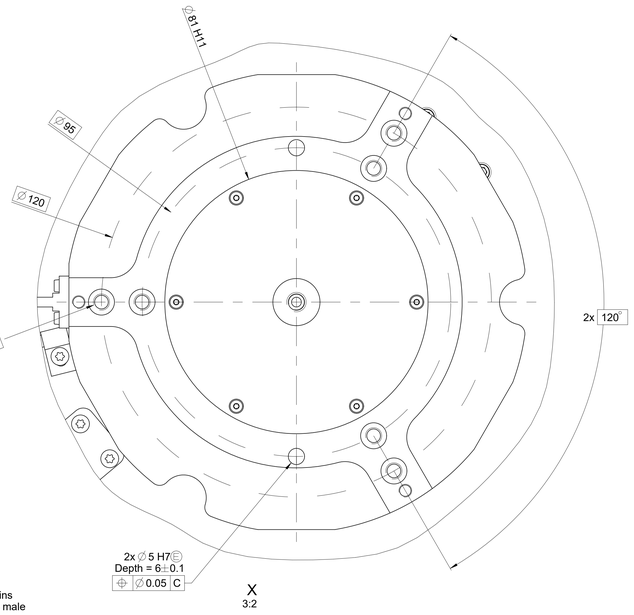

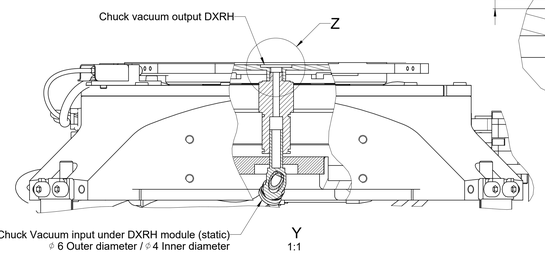

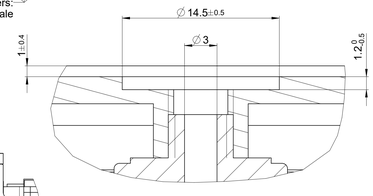

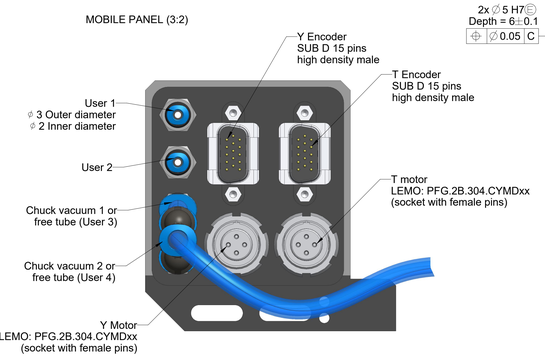

More information about User 5 to User 7 tubes upon request

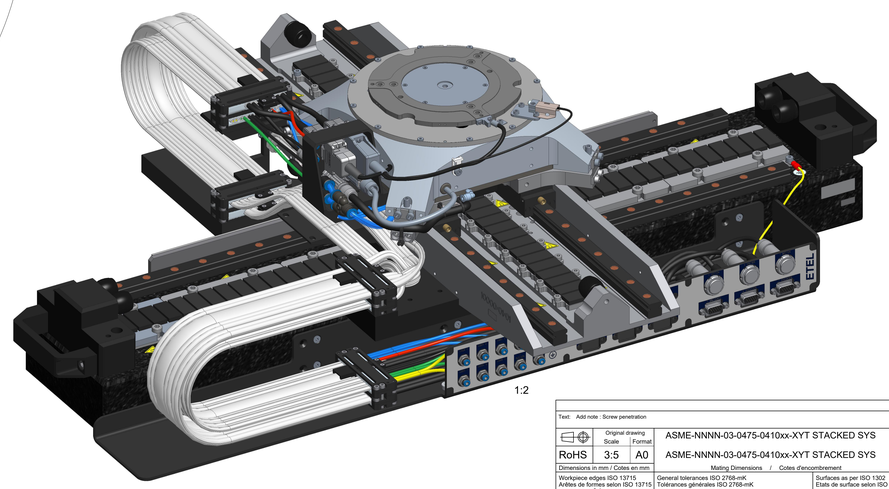

It is required to mount Charon 2 Stages on a granite or equivalent flat surface with a flatness inferior or equal to 3 microns

1352726-01

ID number

Text: Add note : Screw penetration

Change No. C139467-53
Released: 31.05.2022

	Original drawing Scale	Format	
RoHS	3:5	A0	ASME-NNNN-03-0475-0410xx-XYT STACKED SYS
			ASME-NNNN-03-0475-0410xx-XYT STACKED SYS

Material:
Matière:

Dimensions in mm / Cotes en mm

Mating Dimensions / Cotes d'encombrement

Workpiece edges ISO 13715
Arêtes de formes selon ISO 13715
-0.1 -0.3 +0.3 +0.0

General tolerances ISO 2768-mK
Tolérances générales ISO 2768-mK

Surfaces as per ISO 1302
Etats de surface selon ISO 1302

Tolerances as per ISO 8015 : 2011
Tolérances selon ISO 8015 : 2011

Surface treatment:
Traitement de surface:

The reproduction, distribution and utilization of this document as well as the communication of its contents to others without express authorization is prohibited. Offenders will be held liable for the payment of damages. All rights reserved in the event of the grant of a patent, utility model or design. (ISO 16016)

ETEL S.A.
2112 Môtiers
SWITZERLAND

Version Revision Sheet Page

1352724-01-A-01

Document number

1 of 1